Cluster Breaker

Cluster Breakers are designed to break up clusters of frozen food products in preparation for further processing. Cluster Breakers are typically welded to the bottom of a slope-sided infeed hopper, and positioned over a second discharge hopper. As the product passes through the Cluster Breaker, two counterrotating rotors break up the frozen clumps of product allowing the now uniform sized product to discharge into the second hopper.

Simple, Versatile Design

- All stainless steel construction
- Stainless steel rotors (bar or pin style)
- Rotor spacing adjustment mechanism for quick changeover between product runs
- An integral part of Key's Veg-Mix System

Specifications

- 35 ft^3 hopper capacity
- Throughput dependent on product and rotor speed
- 230/460/60/3 motor or hydraulic drive

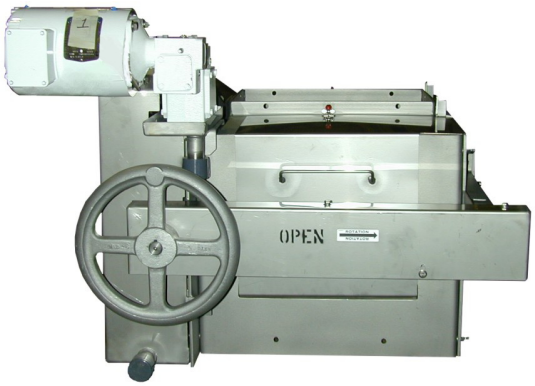

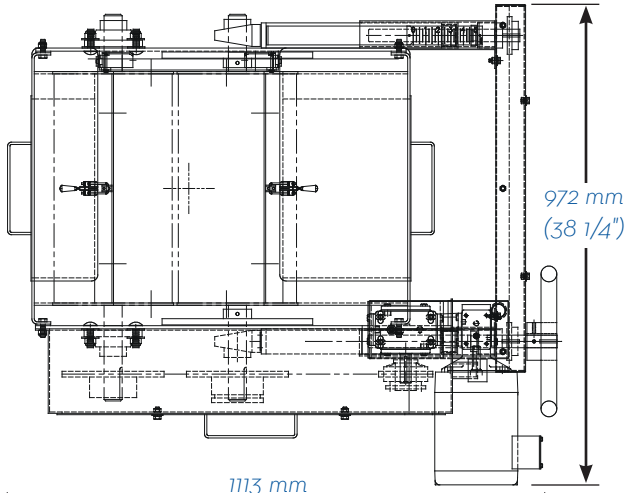

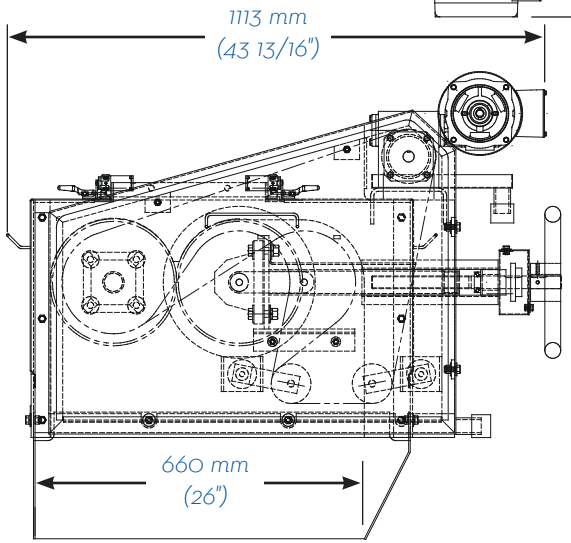

Common Product Applications

- Frozen fruit
- Frozen meat—diced
- Frozen vegetables—cut, diced, whole

Other applications may be used on this equipment. Call Key to find out about how your product(s) may benefit from this technology or another system.

Key Technology
150 Avery Street • Walla Walla, WA 99362 • USA
Phone: 509.529.2161 • Fax: 509.527.1331 • product.info@key.net • www.key.net

REV 100422 NAE